UCCDM18H

Product Data Sheet

18-Device iPad®, Chromebook®, Tablet, and Laptop Cart, Double Frame with Medium Slots and Hinged Door

Benefits

- The "buy it once own it for life" flexible racking technology allows your cart to change as your devices change.
- The safety first design greatly helps reduce potential injuries or accidents.
- The rapid wiring system reduces the time to deploy by as much as 75%.

Features

- Store, secure, transport, and charge any combination of up to 18 Chromebooks, Laptops, Netbooks, or 10" Tablets.
- Two removable 9-slot shelves enable flexible configuration.
- Swap out the shelving for laptops, notebooks, tablets, and e-readers, or for other equipment and storage options.
- Cart cycles power via the included UL® approved timer and power strip.
- The always-on user outlet keeps users safe from the potential danger of electric shock.
- Ships fully assembled.
- Includes durable all-steel chassis and locking doors for security.
- Vented panels and doors keep equipment cool.
- Cable management bars and power wraps maintain order.
- Optional drawers and shelves accommodate devices such as DVD players, printers, projectors, and other peripheral devices.
- Casters (5" heavy-duty) provide unrestricted and easy movement with controlled steering and functionality.
- Users can access devices from the front of the cart, and IT administrators from the back.
- Push/pull handle on cart doubles as a power cord wrap.

Why Black Box

- Black Box is one of the leading providers of carts and lockers in the world. Founded in 1976, Black Box is publically traded and does more than $1 billion in annual sales.
- Every cart includes our lifetime, no-questions-asked warranty (electronics three years). It covers just about everything and includes accidental damage. We don't hide behind limited liability warranties that cover very little.
- Black Box offers a wide selection of standard and custom cart solutions. Black Box has extensive production capacity and maintains large inventories for immediate shipments.
- Ruggedized, heavy-duty carts are guaranteed to last a lifetime. Black Box carts are the heaviest and most durable carts on the market.
- Our carts give you the best value and lowest lifetime cost based on life-use expectancy.

Features Illustrated

Standard rack mounting allows greater flexibility.

Hinged door with handle.

Power brick lacing stores power bricks easily and neatly (medium- and large-shelf models only).

Durable push/pull bar and power cord wrap.

Rackmounted shelf with rolled stainless steel device slots that help prevent scratches.

Locking rear access panel.

Cable managers open easily for fast cable routing.

Laminate top provides extra working space.

Optional Features

Optional integrated pop-up power port for maximum safety.

Optional drawers and shelves available.

Ordering Information

18-Device iPad, Chromebook, Tablet, and Laptop Cart, Double Frame with Medium Slots and Hinged Door (**UCCDM18H**)

18-Device iPad, Chromebook, Tablet, and Laptop Cart, Double Frame with Medium Slots and Sliding Door (**UCCDM18T**)

Technical Specifications

Approvals	UL® approved power strip and timers
Assembled	Yes
Cable Access	Side panels each have a 1.43" diameter hole
Color	Gray
Construction	16-gauge steel with vented sides
Device Capacity	18 Chromebooks, Laptops, Netbooks, or 10" Tablets
Locking	Key: Locking front door and rear access panel for easy cable management (keyed differently)
Slot Dimensions	Storage Slots: (9) per shelf; 13"H x 1.53"W x 15"D (33.02 x 3.89 x 38.1 cm)
Power	Input: 110–120 VAC (6-foot attached power cord included), 50/60 Hz, Plug type: 5-15P, Outlet type: 5-15R; Outlet count: (24), via (2) 12-outlet power strips On/Off switch: Yes
Dimensions	Cart: 44.27"H x 54.41"W x 25.35"D (112.4 x 138.2 x 64.38 cm); Storage Slots: (9) per shelf; Width: 1.53" (3.89 cm); Depth: 15" (38.1 cm) Shipping Carton: 48.5"H x 56"W x 32"D (123.19 x 142.24 x 81.28 cm)
Weight Capacity on Top Surface	150 lb. (68.2 kg), stationary
Warranty	Carts: Lifetime; Electronics: 3 years The Black Box Double Diamond Warranty is our no-questions-asked warranty that protects your Black Box carts and locker from manufacturer defects, accidental damages, liquid spills, and power surges.

Comparison Chart: iPad, Chromebook, Tablet, and Laptop Carts with Hinged Doors*

	UCCDL18H	UCCDM18H	UCCDS20H	UCCDM-10-40H
Device capacity	18 large-screen laptops	18 Chromebooks, Laptops, Netbooks, or 10" Tablets	20 Kindles, Nooks, iPad, iPad Mini, or 7" Tablets	40 Chromebooks, Laptops, Netbooks, or 10" Tablets
Outlet strips	(2) 12-outlet power strips	(2) 12-outlet power strips	(2) 12-outlet power strips	(4) 12-outlet power strips
Casters (5" heavy-duty) included	Yes	Yes	Yes	Yes
Laminate top included	Yes	Yes	Yes	Yes
Slot size	Width: 1.53" (3.89 cm); Depth: 17" (43.18 cm)	Width: 1.53" (3.89 cm); Depth: 15" (38.1 cm)	Width: 1.37" (3.48 cm); Depth: 10" (25.4 cm)	Width: 1.37" (3.48 cm); Depth: 13" (33.02 cm)
Number of Storage Slots	(9) per shelf	(9) per shelf	(10) per shelf	(10) per shelf
Power management dividers	20	20	22	44
Height	44.27" (112.4 cm)	44.27" (112.4 cm)	44.27" (112.4 cm)	44.27" (112.4 cm)
Shipping Dimensions	48.5"H x 56"W x 32"D (123.19 x 142.24 x 81.28 cm)	48.5"H x 56"W x 32"D (123.19 x 142.24 x 81.28 cm)	48.5"H x 56"W x 32"D (123.19 x 142.24 x 81.28 cm)	48.5"H x 56"W x 32"D (123.19 x 142.24 x 81.28 cm)
Weight Capacity on Top Surface	150 lb. (68.2 kg), stationary	150 lb. (68.2 kg), stationary	150 lb. (68.2 kg), stationary	150 lb. (68.2 kg), stationary
Warranty	Carts: Lifetime; Electronics: 3 years	Carts: Lifetime; Electronics: 3 years	Carts: Lifetime; Electronics: 3 years	Carts: Lifetime; Electronics: 3 years

*Also available with sliding doors.

Dimensional Diagrams

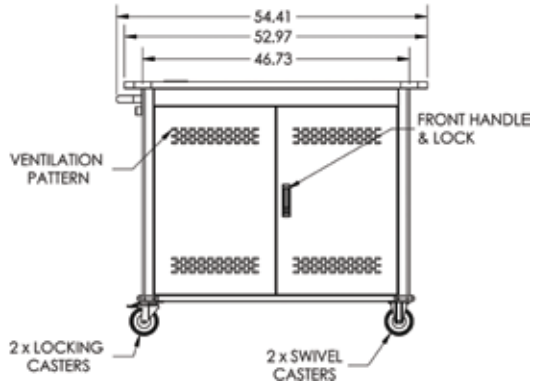

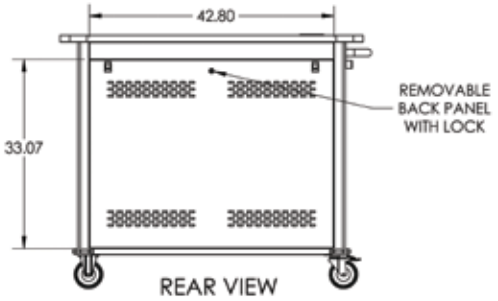

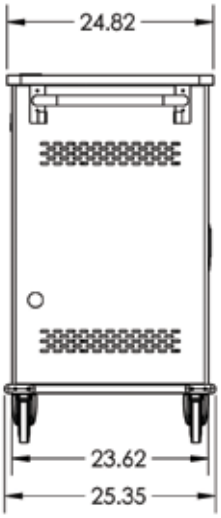

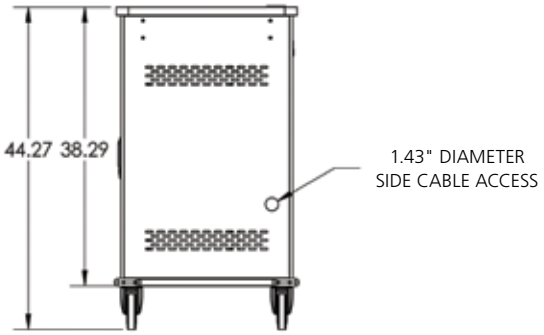

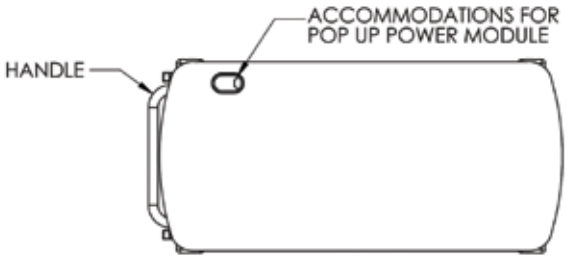

Disclaimer:

Black Box Network Services shall not be liable for damages of any kind, including, but not limited to, punitive, consequential or cost of cover damages, resulting from any errors in the production information or specifications set forth in this document and Black Box Network Services may revise this document at any time without notice.

© Copyright 2014. Black Box Corporation. All rights reserved. Black Box® and the Double Diamond logo are registered trademarks of BB Technologies, Inc.
Any third-party trademarks appearing in this publication are acknowledged to be the property of their respective owners.

uccdm18h_ds_Rev3